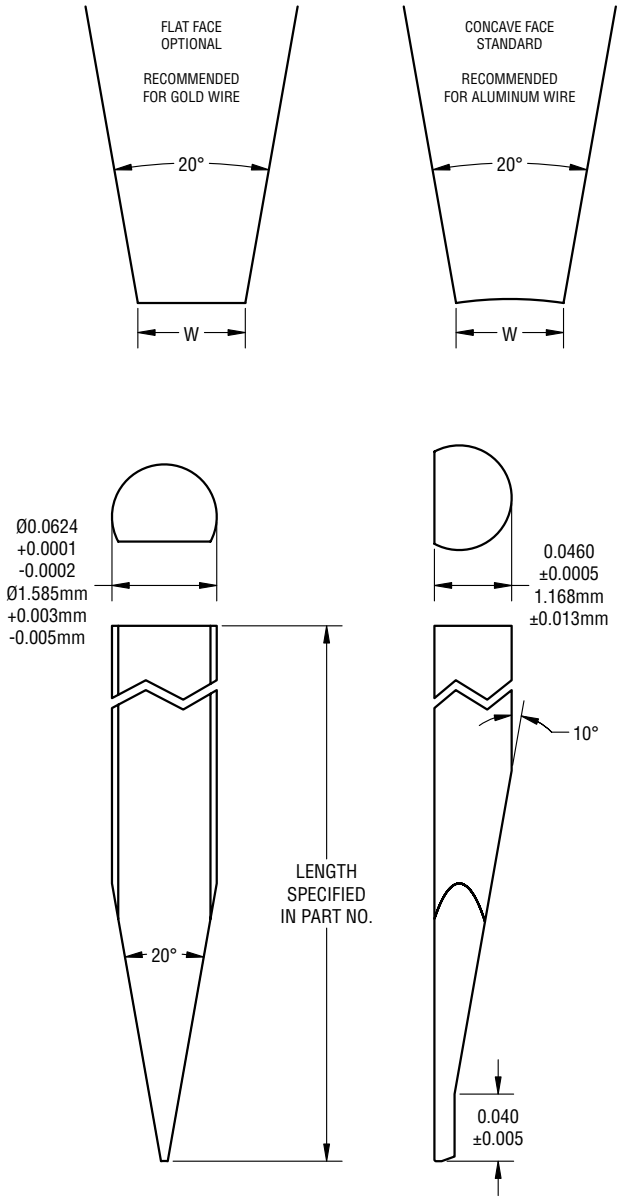

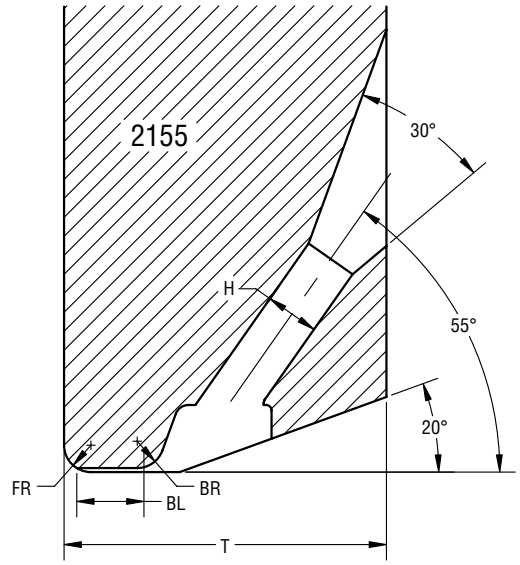

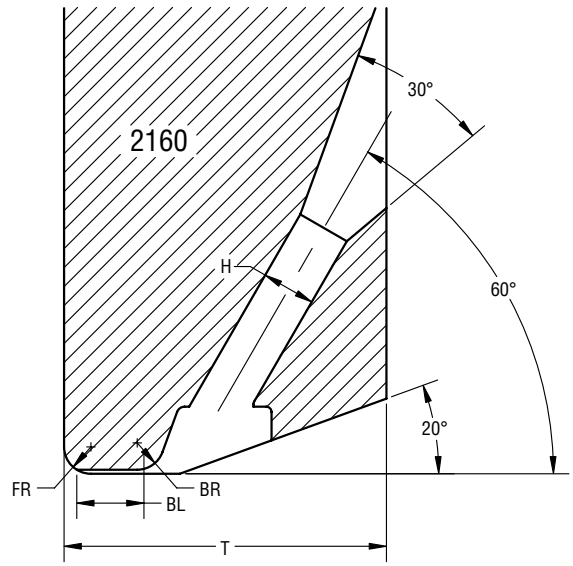

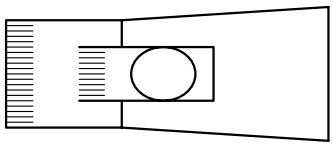

Specify:
Series/Wire Feed Angle-Hole Size/Bond Length-Length-Options

Example:
2160-2020-S
2155-1510-3/4-F-TiC

Material:
Tungsten Carbide Standard
Titanium Carbide Optional
(Specify "-TiC" in part no.)
Cermet Tip Optional
(Specify "-BKCER" in part no.)

Features:
The MaxiGuide design encloses and guides the wire to the bond foot, thereby enhancing wire control and bond centering.