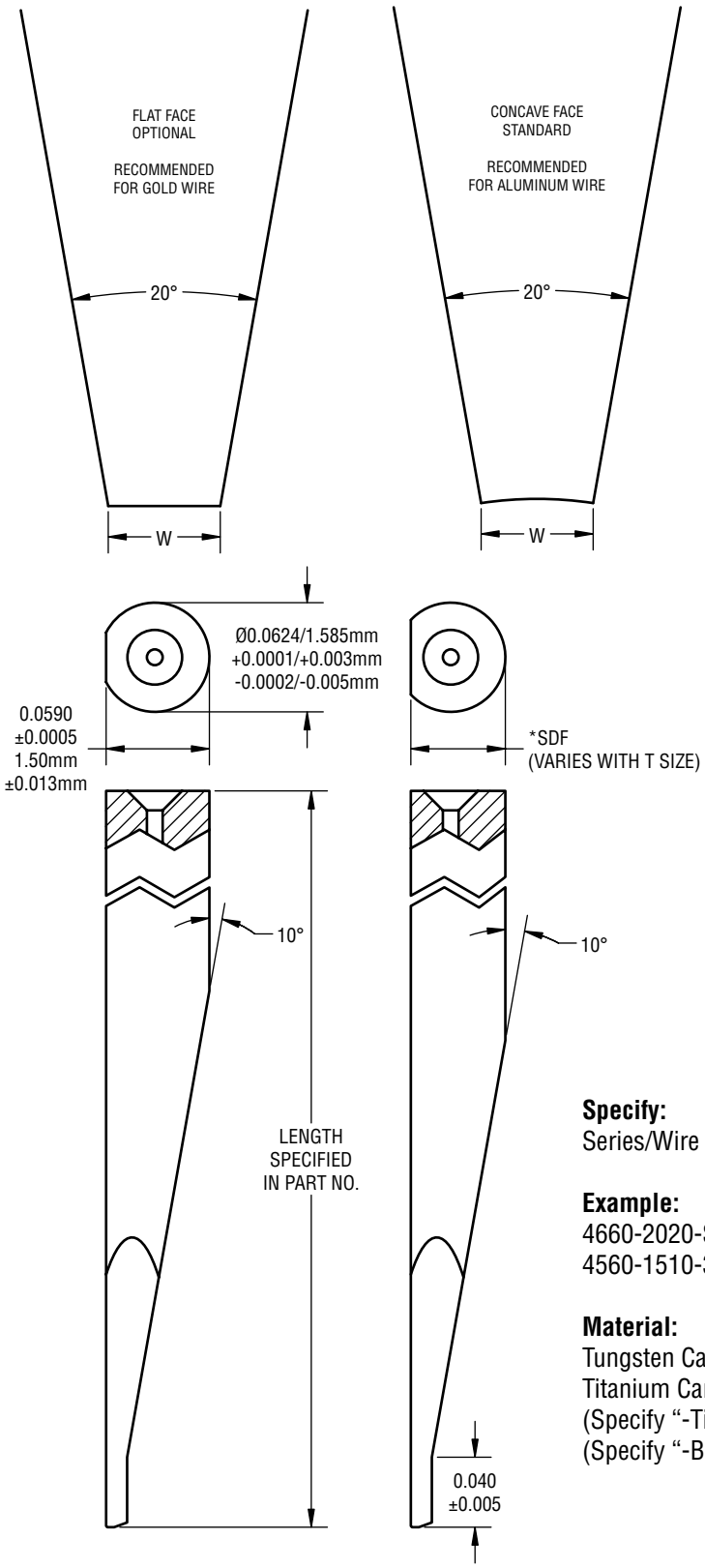

4660 Standard Shank Design

4560 Close Guide Shank Design

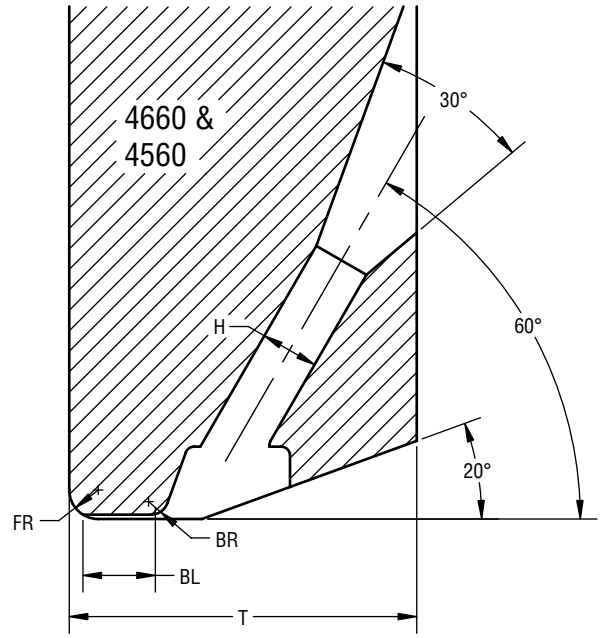

Specify:
Series/Wire Feed Angle - Hole Size/Bond Length - Length - Options

Example:
4660-2020-S
4560-1510-3/4-F-BKCER

Material:
Tungsten Carbide Standard
Titanium Carbide Optional
(Specify "-TiC" in part no.)Cermet Tip Optional
(Specify "-BKCER" in part no.)